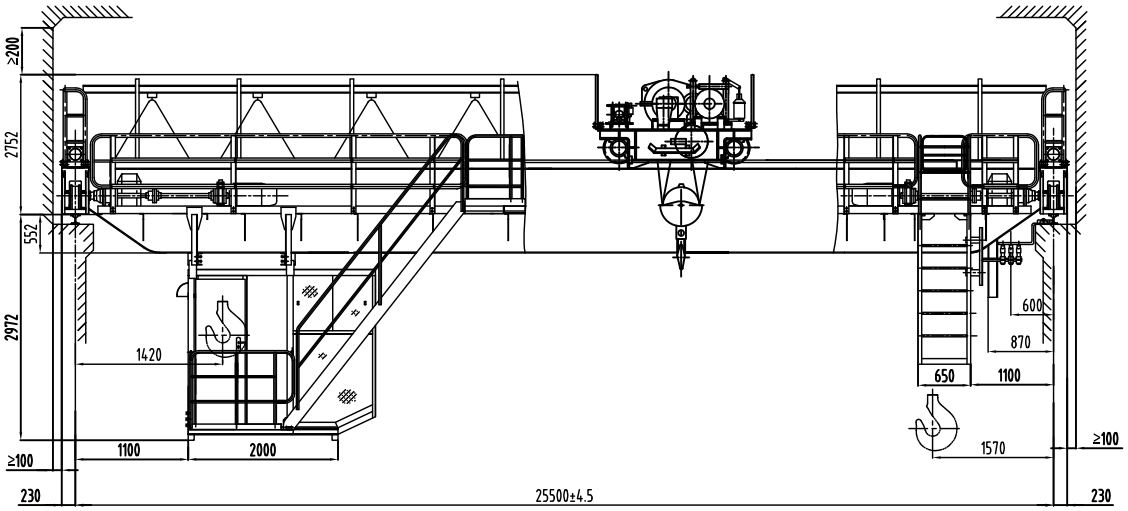

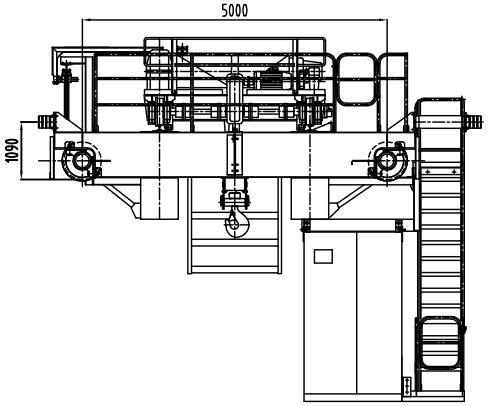

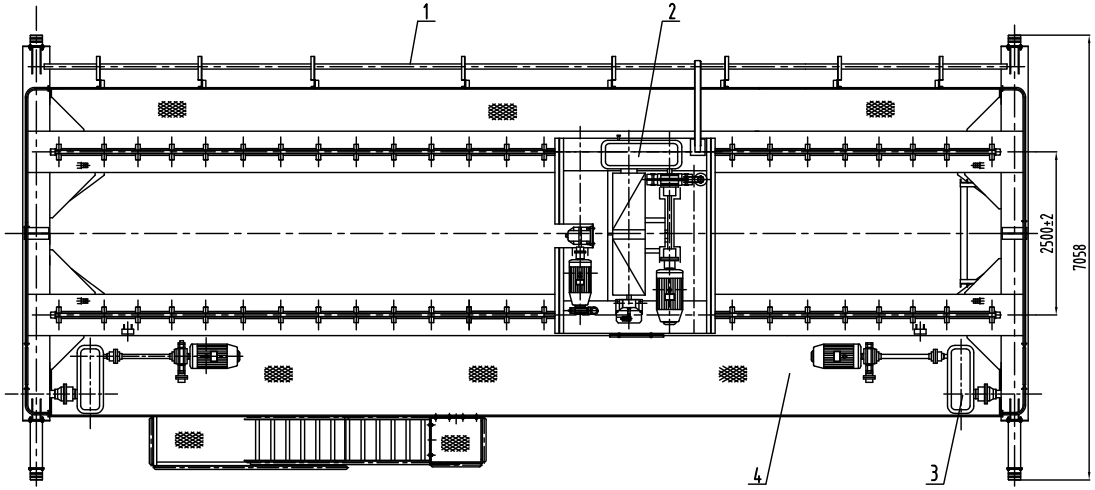

Main technical parameters

Item \ Mechanism name		Lifting: Main lifting	Item \ Mechanism name		Traveling: Trolley	Traveling: Crane
Lifting capacity	t	**50**	Track gauge	m	**2.5**	**25.5**
Lifting speed	m/min	**5.9**	Traveling speed	m/min	**38.5**	**85.9**
Working duty		**M5**	Working duty		**M5**	**M5**
Max.Lifting height	m	**12**	Cuisine stroke	mm	**60**	**150**
Total power	KW	**89.5**	Max. Wheel load	KN		**410**
Power supply		**3-phase, 380V, 50HZ**	Type of rail		P43	QU80

Configuration			
Mechanism name	Lifting	Traveling	
Item		Trolley	Crane
Motor	YZR 280M-10	YZR 160M2-6	YZR 180L-8
Power	55KW	8.5KW	2X13KW
Brake	YWZ-400/90	YWZ-200/25	YWZ-300/25
Reducer	ZQ1000-48.57	ZSC600-37.9	ZQ500-20.19
Wire group	24NAT-6X19W+FC1670	Wheel group 4Xφ500	Wheel group 4Xφ800
Drum group	φ800X2000		

number	code	name	stuff	quantity	single weight (kg)	total weight (kg)	remark
4		crane span structure	part	1			
3		crane travel mechanism	part	1			
2		trolley	part	1			
1		electric	part	1			

Technical Requirement

1. Manufactured according to relevant regulation of GB/T 14405
2. Distance from workshop backspin to crane peak should ≥200mm
3. Control mode: cab control

mark	level	change file	sign	date
design		standard		
check		electric		
verify		approval		
technic		date		

QD Double Girder Overhead Crane with Hook
QD 50t-25.5m A5

General drawing

Yuantai Crane Machinery

One page	Weight	Scale
Total	~53t	1:30

Reference drawing